Design of a 10 GHz LNA for Amateur Radio Operation

by Tom Apel - K5TRA

Ham radio operation on 10 GHz is somewhat exotic, being far removed from global short-wave communication below 30 MHz, or regional VHF and UHF communication. Despite the arcane nature of amateur (ham) radio on microwave bands, there is a surprising level of activity in many metro areas with large numbers of hams working in technology. Since ham radio store-bought "appliance" radios don't exist for the microwave bands, gear must necessarily be home-brewed.

When the design of the 10 GHz ham radio station discussed in this article was begun, one of the key blocks needed was a good low-noise amplifier (LNA). This article describes how an LNA was custom made. NI AWR Design Environment™ Microwave Office circuit design software was used to design the RF circuit, which enabled the designer to tune the design while simultaneously watching gain, match, NF, and stability.

Approach

In order to maximize the 10 GHz receiver sensitivity to weak signals, the LNA was located at the dish feed horn. A coaxial relay switched the horn antenna to the LNA during receive and to the power amplifier (PA), which was also mounted nearby, during transmit operation. The LNA was designed to operate from +12 volts and the designer also wanted at least 18 dB of gain, less than 2 dB noise figure, and unconditional stability.

Since this project was to be built entirely at home without the benefit of the fabrication and assembly tools available in a design and manufacturing facility, some important choices needed to be made at the outset. Among these were: (1) semiconductors must be packaged, (2) Rogers R04003C laminate for RF board, and (3) an available standard package such as Hammond 1590LLB or 1590LBFL.

Apel, Con't on pg XX

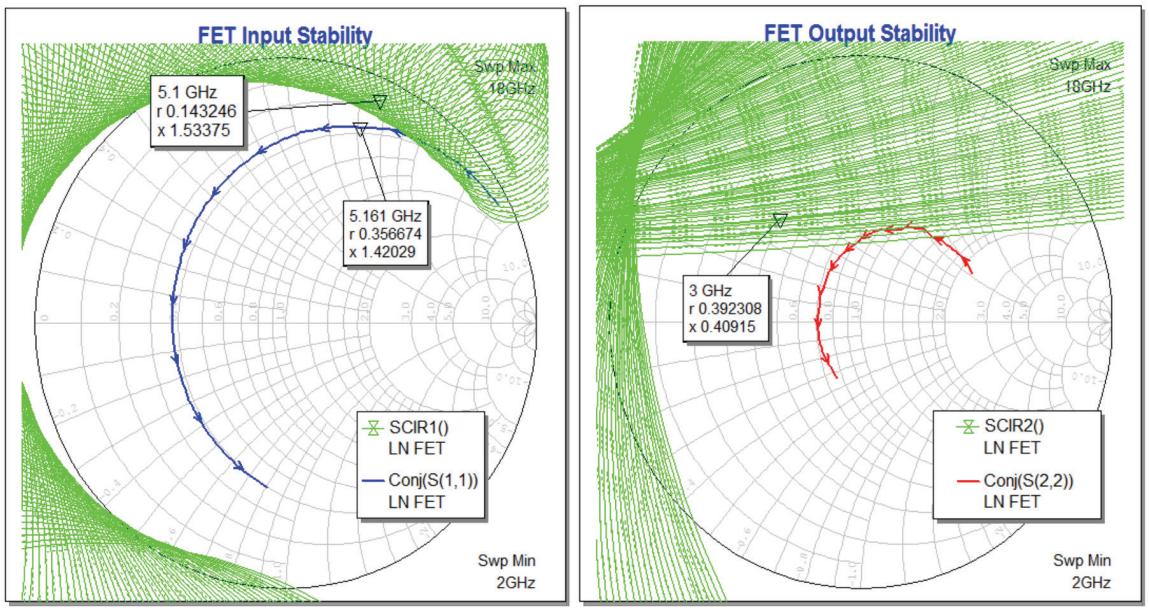

Figure 1: pHEMT stability regions and conjugate port impedances

Apel, Con't from pg XX

CEL (Renesas/NEC) NE3512S02 or NE3503M04 were identified as good packaged pseudomorphic high electron mobility transistor (pHEMT) candidates for the two LNA stages. These devices are readily available from Mouser at a reasonable price. A negative gate bias supply was required for operation of these depletion-mode field-effect transistors (FETs).

Rogers R04003C laminate is a good RF substrate with controlled dielectric properties. The dielectric constant is 3.38 ± 0.05. Sheets of this material are available in six different dielectric thicknesses. For this LNA, 20 mil material was selected. Resist patterning, etching, and vias are discussed later in this article.

The Hammond 1590LLB cast aluminum package was selected for this LNA. It was readily available and low in cost. The interior cavity was 1.834" x 1.834", which was large enough to support propagation down to just below 6.5 GHz, so potential moding needed to be addressed in the construction with an RF damping material such as Eccosorb.

Amphenol 132147-48 2-hole SMA connectors provided an RF interface compatible with a 20 mil laminate and 80 mil housing thickness. The external dielectric sleeve could be trimmed to 80 mils (to match the package wall thickness) and the external center contact could be trimmed to overlap with the circuit board by 25 mils for microstrip launch.

Linear analysis, design trade-offs, and tuning were performed with Microwave Office software, which contributed significantly to the success of this project. The design steps are detailed in the following section.

Design

The pHEMT S-parameter and noise data were provided on the CEL website. This data included package parasitics and source grounding inductance over a range of bias conditions. The LNA design was performed for FETs operating with 15 to 20 mA drain current.

In order to gain insight into the stability trade-offs in the LNA, it was worthwhile looking at inherent stability behavior of these FETs. As can be seen in Figure 1, the plots suggest that series loss at the input and shunt loss at the output will enhance stability. Of course loss at the input will also degrade low-noise performance and output loss trades with gain. Interstage matching can provide an alternative to adding loss. If first stage output loading is not allowed to be highly inductive by careful interstage design, good two-stage stability can be assured. Initially, a single-stage amplifier was designed as a building block in a two-stage amplifier. The actual interstage RF circuit was a cascade of an output network from stage-1 and the input network from stage-2 with a phase rotation line inserted between them. This was used to tune the overall two-stage stability performance.

The overall amplifier schematic is shown in Figure 2. Gate and drain bias networks comprise a high impedance ¼ λ line that is terminated by a low impedance, bypassed, DC feed circuit. A low impedance (near short circuit) for in-band frequencies is provided by an open-circuit ¼ λ radial stub. The DC feed path is also decoupled and damped by series resistance.

The +12 volt DC input is first dropped to a regulated 3.3 volt rail, followed by a 2.5 volt regulator. The 3.3 volt rail feeds the collector of two emitter follower pass transistors for drain supply of the two LNA FETs. The 3.3 volt rail also powers the negative voltage generator IC (MAX1044) for the LNA FET gate bias. The 2.5 volt regulator provides a base reference voltage for the emitter followers. At turn-on, the rise in base voltage is delayed by a RC circuit to sequence the gate negative supply before the drain positive supply. The emitter followers also provide supply path isolation between RF stages.

Apel, Con't on pg XX

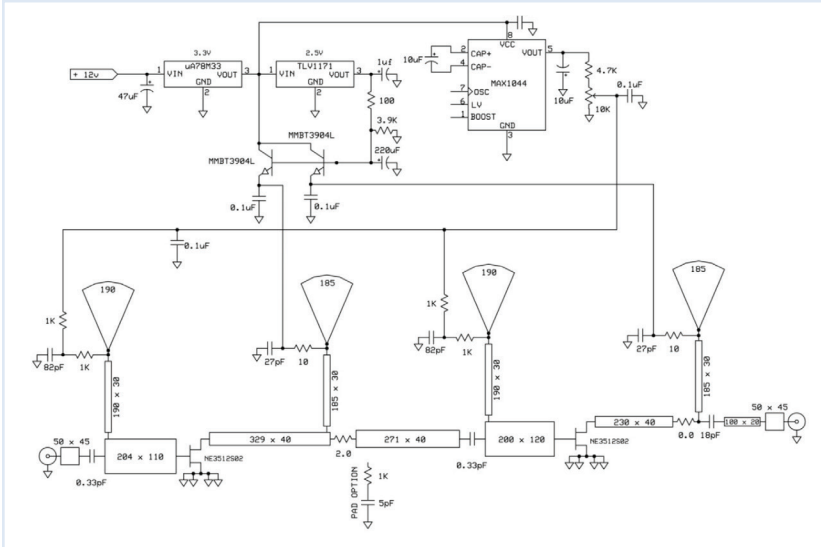

Figure 2: Two-stage 10 GHz LNA schematic

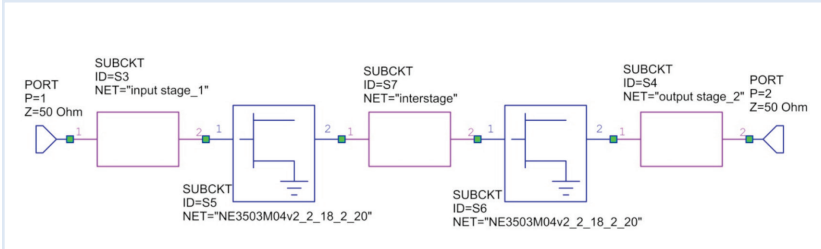

Figure 3: LNA RF circuit cascade

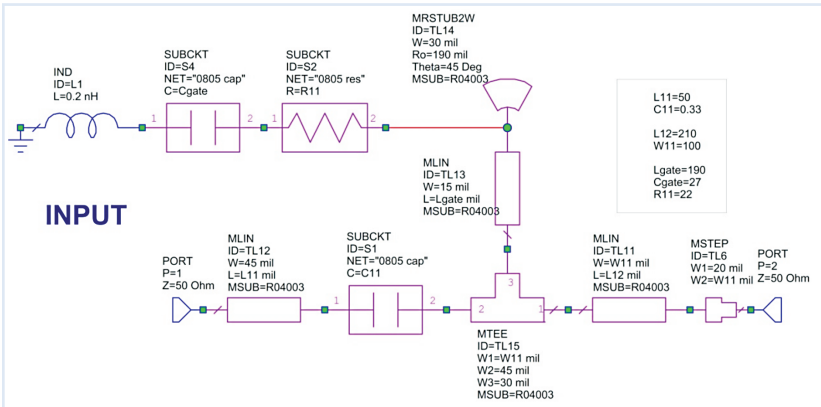

Figure 4: LNA input RF circuit

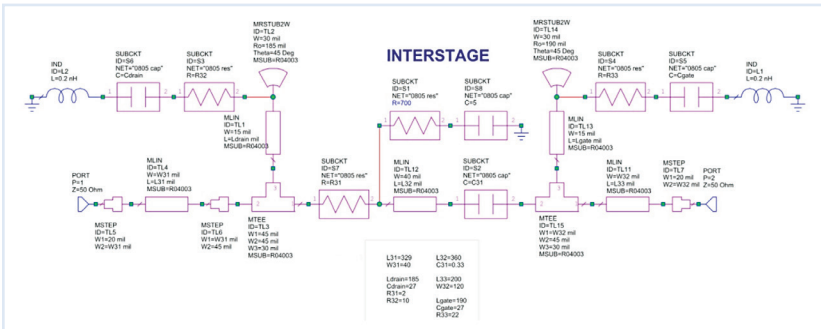

Figure 5: LNA interstage RF circuit

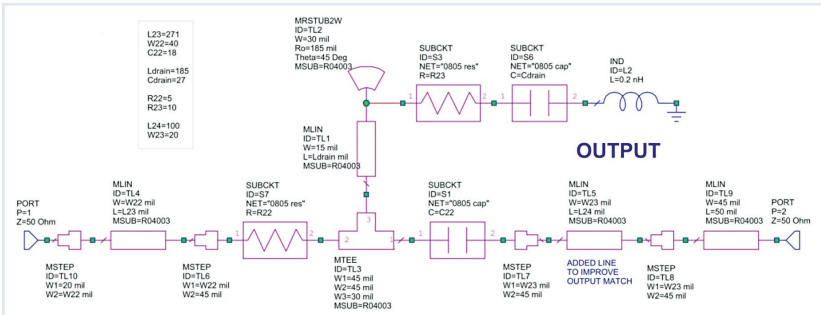

Figure 6: LNA output RF circuit

Apel, Con't from pg XX

The RF cascade is represented in Figure 3. Details of the input, interstage, and output RF matching networks can be seen in Figures 4, 5, and 6.

The overall simulated gain, port match, and noise performance are shown in Figures 7, 8, and 9. For ham radio operation, the frequency region of most interest is 10.368 GHz. The overall swept performance is not extremely narrow. Figure 9 shows a wide (2.5 octave) sweep. No extreme peaks in gain are seen at lower, out of band, frequencies.

The well behaved out-of-band behavior displayed in Figure 9 suggests that the stability of the LNA will be good. A detailed stability analysis confirms this. Figures 10, 11, and 12 display the details of this analysis. For unconditional stability, Rollett's K factor must be greater than unity and the B1 parameter must remain positive. This can be seen in Figure 10. Figures 11 and 12 show that no possible port-terminating passive impedances can cause instability.

The layout of the LNA is shown in Figure 13. The RF input is on the right and output is on the left edge. Layouts were done for both NE3512S02 and NE3503M04 pHEMTs. Figure 13 shows the NE3512S02 pattern. In order to pattern resist for etching, this layout was mirrored, as seen in Figure 14.

Construction

Construction of the LNA began with resist patterning and etching of the circuit board. A laser printer was used to define a 1:1 mirrored image of the layout on a sheet similar to Mylar called "Press-n-Peel." This resist pattern was transferred to a clean board with temperature and pressure. The board was then etched in a homemade bubble etcher and finished with a thin tin plate. Via holes were defined with a 35 mil drill. Figure 15 shows the undrilled, etched board placed in the undrilled housing. The via holes were drilled with the board placed in the housing as depicted in Figure 15. The depth of the drill was sufficient to pass through the board and mark the floor of the housing. In this way the locations of the vias were marked in the housing. With the homebrew board process, it was necessary to solder wires in the through holes at each via location. After the excess wire was nipped as short as possible, there remained a small bump below each via. Each drill marked location in the floor had to be relieved with a clearance recess. So the floor had an array of divots before the assembled board was attached. A commercial PC board shop would eliminate all of the difficulties described here; however, the cost for single board prototyping on Rogers material is prohibitive for a home project.

An interior view of the completed LNA is shown in Figure 16. The input is on the right and output on the left. The 3.3 volt regulator can be seen on the left wall. The DC circuitry can clearly be seen along the top of the board and the RF amplifier stages on the lower portion. Four small rectangles of Eccosorb can also be seen attached to DC bias feed lines. This was done for practical reasons as insurance against parasitic feedback paths, although likely not needed. As stated earlier, moding suppression is needed in this housing because 10 GHz will propagate through a cavity this large. Eccosorb patches were placed on the right and lower side walls as well as on the inside of the cover. Stability behavior was excellent.

The completed LNA can be seen in Figure17. The measured gain is just over +18 dB and the associated NF is near 2 dB. While this meets the performance targets for use in the 10 GHz station, the predicted levels are a bit better. The differences can be attributed to poor line width control and excess via inductance in my home fabricated circuit board.

For maximum receiver sensitivity (minimum system noise figure), losses between the dish feed horn and the LNA had to be minimal. Similarly, on the transmit side, losses between

Apel, Con't on pg XX

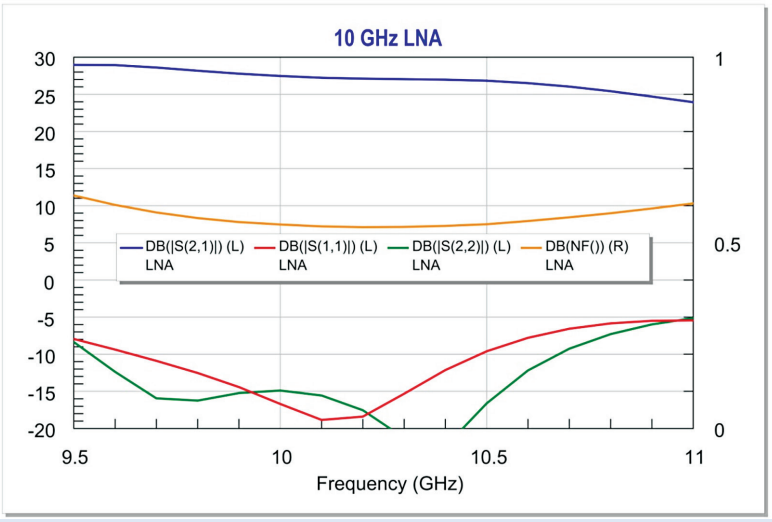

Figure 7: Overall LNA gain, port match, and noise performance

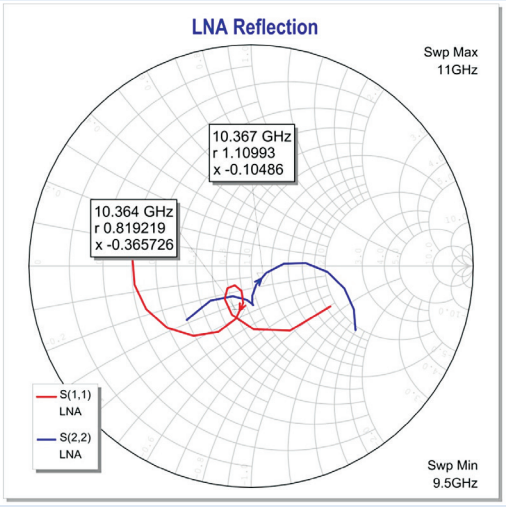

Figure 8: LNA port impedances

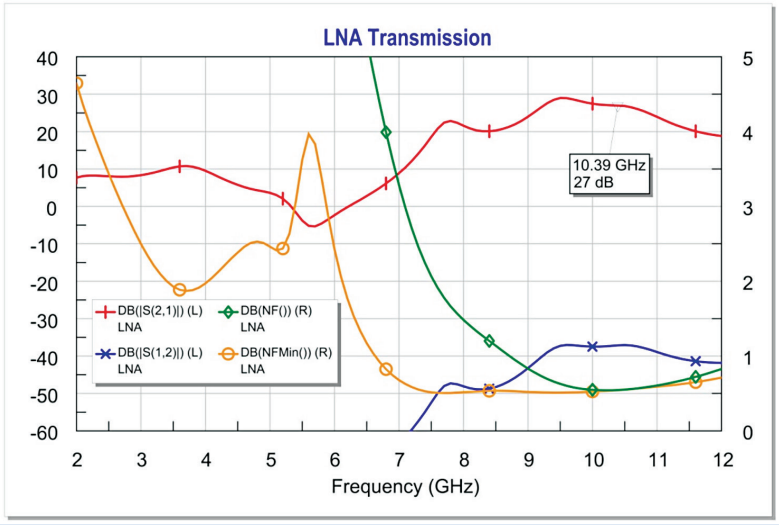

Figure 9: Wide sweep of LNA gain, port match, and noise performance

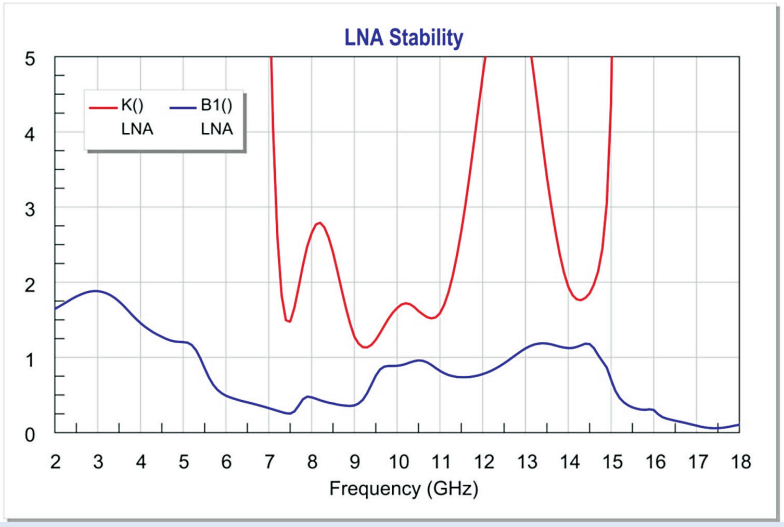

Figure 10: LNA stability parameters K and B1

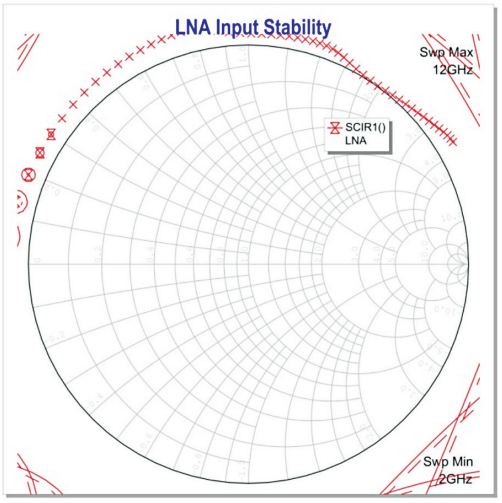

Figure 11: LNA input stability

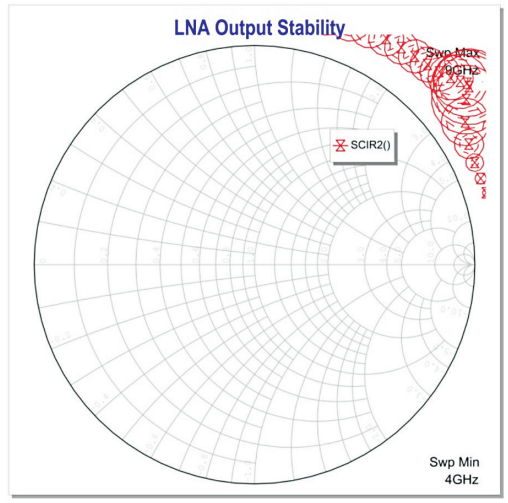

Figure 12: LNA output stability

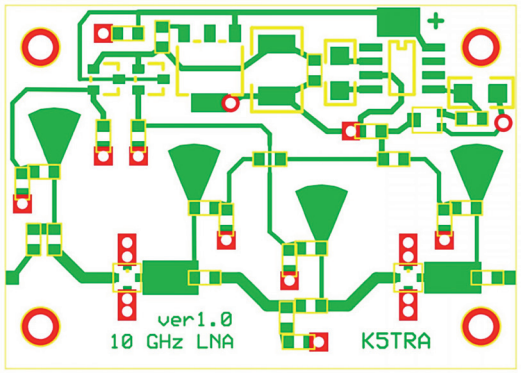

Figure 13: LNA layout

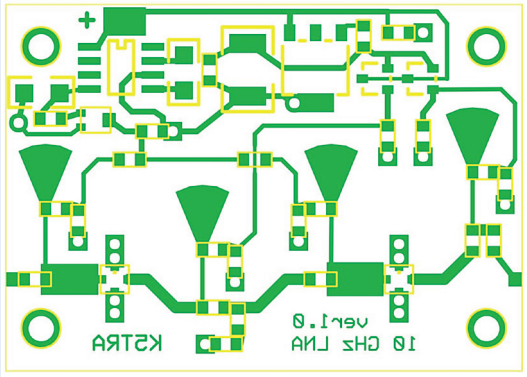

Figure 14: Mirrored LNA layout

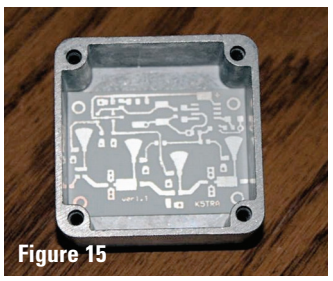

Figure 15

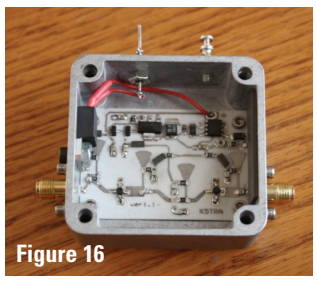

Figure 16

Figure 17

Figure 15: Etched, undrilled board placed in undrilled housing
Figure 16: Interior view of completed LNA
Figure 17: Completed 10 GHz LNA

Figure 18: 10 GHz transverter (transmit & receive converter)

Apel, Con't from pg XX

the power amplifier and the dish feed horn had to be kept to a minimum. While most of the transmit and receive circuitry was located in the transverter (also home brew) shown in Figure 18, the LNA and PA were mounted with the feed horn at the dish.

Figure 19 shows the LNA, coaxial relay, PA, isolator, and feed horn. The LNA can be seen on the right and PA on the left. The back or the feed horn can be seen at the top of the bracket. A side view of this assembly can be seen in Figure 20.

Conclusion

Because store-bought ham radios are not available for microwave bands, this article has described the custom design of a 10 GHz ham radio station. A key block needed was a good LNA, which used Microwave Office to design the RF circuit. This enabled the designer to tune the design while simultaneously watching gain, match, NF, and stability.

On-air results have been outstanding. There are half a dozen ham radio operators with 10 GHz stations within 50 miles of the designer and they can all communicate on a routine basis. He also has a hilltop location with a good view in all directions. The most distant of these local hams is located 45 miles away; yet, they can talk with strong signal levels any time. The most exciting contact occurred early one morning when ducting and scatter conditions supported unusually long path propagation. The designer was able to contact a station in Allen, Texas (north of Dallas) 213 miles away.

For more information on this topic: http://k5tra.net/10GHz.html .

• K5TRA •

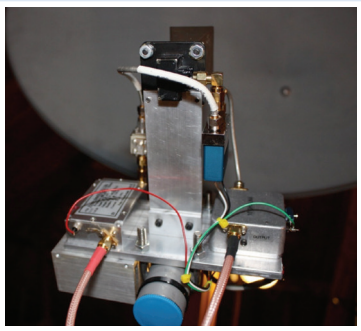

Figure 19: Dish horn feed assembly with LNA and PA

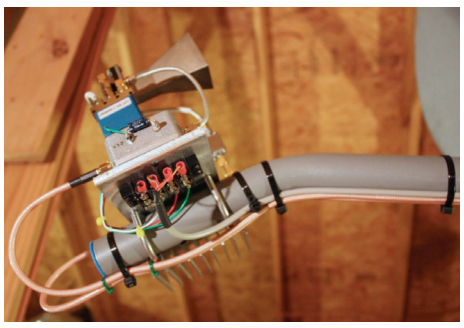

Figure 20: Side view of dish horn feed assembly with LNA and PA